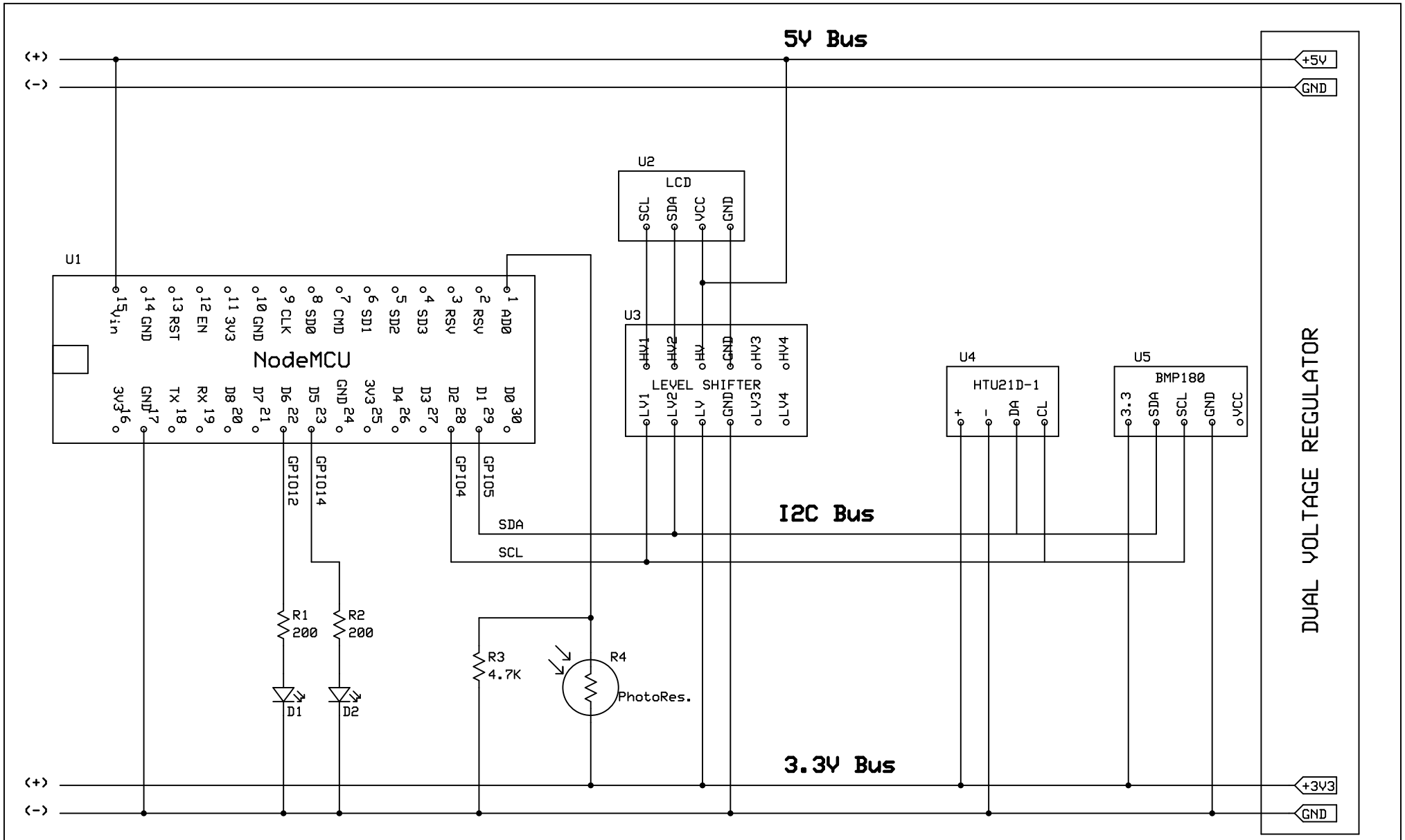

IEEE Northern VA		
IoT Weather Station		
K. W. Berger	Rev 1.4 5/20/2016	Sheet 1 of 1